RevNo	Revision note	Date	Signature	Checked

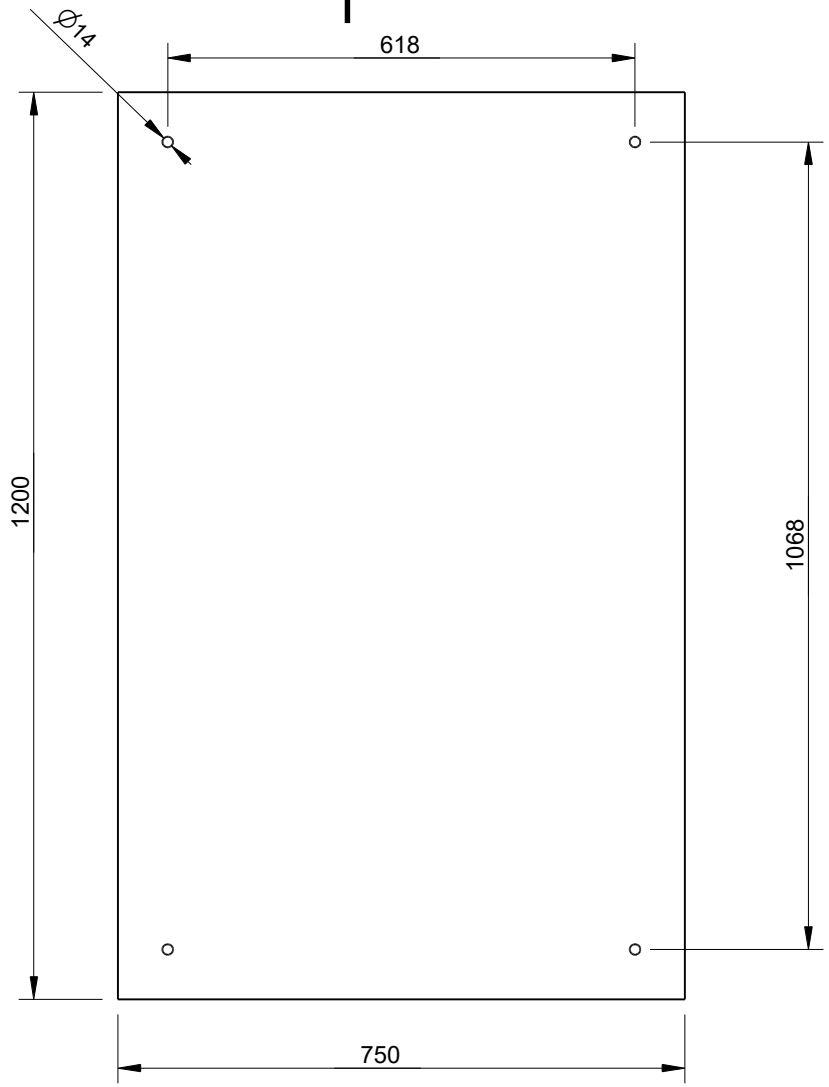

Itemref	Quantity	Title/Name, designation, material, dimension etc		Article No./Reference	
Drawn by NB	Checked by	Approved by - date	File name	Date 3/10/22	Scale 1:1

ARDEL SAFE CO

DC6 BACK PLATE

DC6 REAR HOLE CENTRES

Edition

Sheet 1 OF 1

RevNo	Revision note		Date	Signature	Checked

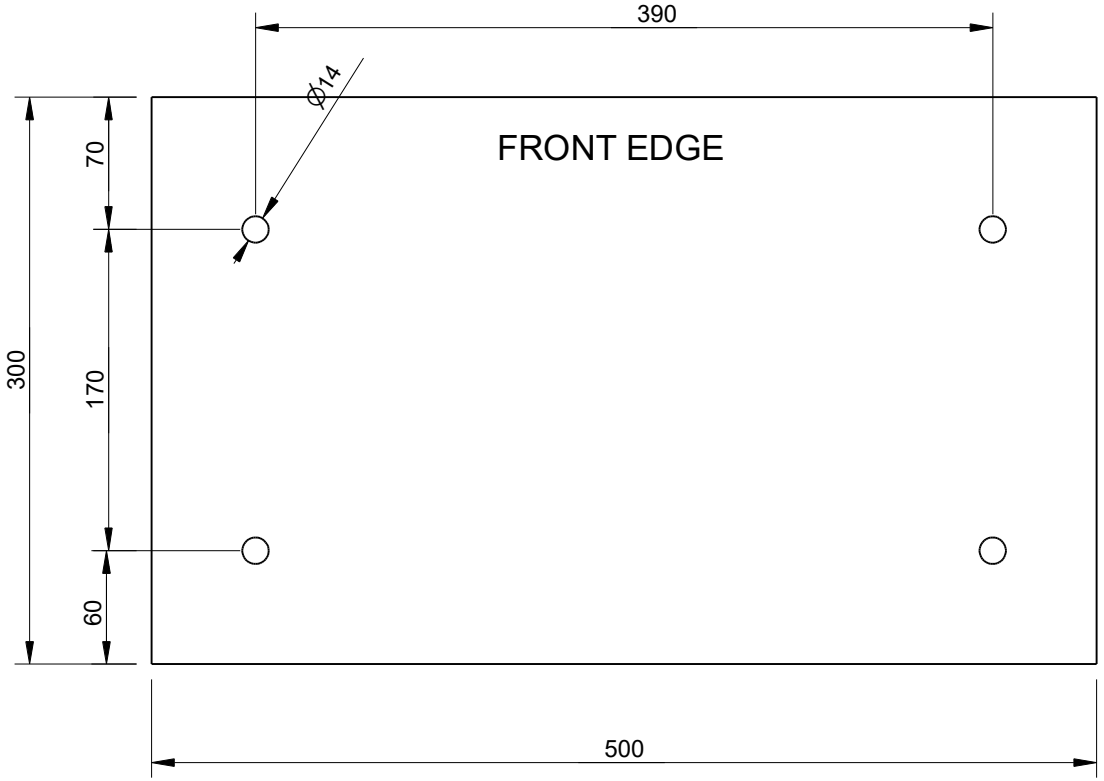

Itemref	Quantity	Title/Name, designation, material, dimension etc			Article No./Reference	
Drawn by NB		Checked by	Approved by - date	File name	Date 02/10/22	Scale 1:1
ARDEL SAFE CO			DC6 and 7 BASE			
					Edition	Sheet 1 OF 1